HAWK 600

600 SERIES SLOT IN COOKERS

PROUDLY AUSTRALIAN MADE AND OWNED

INSTALLATION AND OPERATING INSTRUCTIONS

KEEP THIS BOOKLET FOR FUTURE REFERENCE

Read these instructions fully taking note of the safety information and correct operating procedures.

SAFETY INFORMATION

If you smell gas –

- Open windows and doors
- Extinguish any open flame
- Do not touch electrical switches
- Call your gas supplier immediately – If in doubt who to call ring '000'

Please read the safety after installation section following. Safety is common sense but sometimes you need a reminder. Obviously children should be supervised to ensure that they do not play with the appliance. Familiarity can lead to children touching hot surfaces or cause spillage of hot liquid over them with disastrous results. CHILDREN SHOULD NOT BE NEAR THE APPLIANCE WHEN COOKING. Children or the infirm should not use cooking appliances without supervision.

SAFETY AFTER INSTALLATION

The purpose of this section is to direct your attention to the possibility of accidents that can be avoided.

- Remember the appliance produces heat; therefore some parts will get hot. Let wire pan supports and other surfaces cool down before touching them.
- Do not leave children unattended near the appliance when it is not in use.
- Do not store or use petrol or other flammable vapors or liquids in the vicinity of this or any other gas appliance.
- Do not use the burners, grill or oven as a room heater.
- Do not leave handles of saucepans protruding out into the room or over adjacent burners. Always check that the saucepan is stable and will not be likely to tip its contents before you release your grip.
- Do not store items of interest to children in the cabinet above the appliance. Children climbing or standing on the appliance could result in a serious injury.
- DO NOT USE OR STORE FLAMMABLE MATERIALS IN THE APPLIANCE STORAGE DRAWER OR NEAR THIS APPLIANCE.
- During use the appliance becomes hot. Take care, avoid touching heating elements and burners.

- This appliance is not intended for use by persons (including children) with reduced physical, sensory or mental capabilities, or lack of experience and knowledge, unless they have been given supervision or instruction concerning use of the appliance by a person responsible for their safety.
- Children should be supervised to ensure that they do not play with the appliance.
- Do not use harsh abrasive cleaners or sharp metal scrapers to clean the oven door glass or the glass of the hinged lid, since they can scratch the surface, which may result in shattering of the glass.
- A steam cleaner must not be used to clean the appliance.
- The appliance is not intended to be operated by means of an external timer or separate remote control system.
- CAUTION: The cooking process has to be supervised. A short term cooking process has to be supervised continuously.
- WARNING: Unattended cooking with fat or oil can be dangerous and may result in fire.
- WARNING: Accessible parts may become hot during use. Young children should be kept away.
- The appliance must not be installed behind a decorative door in order to avoid overheating.
- If the electrical supply cord is damaged, it must be replaced by the manufacturer, its service agent or similarly qualified persons in order to avoid a hazard.
- It is necessary to allow disconnection of the appliance from the supply after installation. The disconnection can be achieved by having the electrical plug accessible or by incorporating a switch in the fixed wiring in accordance with the wiring rules.
- Danger of fire: Do not store items on the cooking surface.
- When lighting the griller, always open the griller compartment door.
- When lighting the oven, always open the oven door.

WARNINGS

1. Certain foods and food additives contain acids or are caustic such that if allowed to come in contact with finishes or enamel may cause them to break down. Examples of these are: Vinegar, sour milk, citrus fruit, and strong salt solutions and fruit juices. Do not leave substances in contact with your appliance. If there is an accidental spill wipe it up immediately.
2. DO NOT SPRAY AEROSOLS IN THE VICINITY OF THIS APPLIANCE WHILE IT IS IN OPERATION. The use of aerosol cans of insect spray, deodorants, repellents, stove cleaners, hair spray, paint, food preservatives ect. must be avoided in the proximity of your appliance to avoid explosion as some contain chemicals which cause rapid corrosion of metal, enamel etc. when in operation. Damage from this is not covered by the appliance warranty.
3. DO NOT use Cooking Oil Sprays near a gas flame as it may ignite.
4. Where this appliance is installed in marine craft or in caravans/ mobile trailers it shall not be used as a space heater.
5. Do not use asbestos mats, metal diffusers or similar devices over any burner as temperatures are likely to build up to a point where glass and or enamel could be damaged. Adjust the flame to give correct amount of heat. Do not leave the flame extending out past the pan.
6. THIS APPLIANCE MUST BE INSTALLED BY AN AUTHORISED PERSON.

7. **IF YOU SUSPECT THAT THERE IS A GAS LEAK TURN OFF THE GAS & ELECTRIC SUPPLY AND VENT THE AREA.** Seek professional help to fix the leak before operating again.
8. Do not allow children near this appliance while cooking.
9. Ensure handles of saucepans do not protrude over the front of the cooker.
10. Do not use vinyl covered timber doors and surround near or above the cooker as the material will shrink from the heat of the cooker.
11. This appliance must be installed in a cabinet with base support below the front and rear of the appliance and fixed into position to prevent movement. It is not a freestanding appliance.
12. DO NOT PLACE ARTICLES ON OR AGAINST THIS APPLIANCE

WARNING: TO THE CARAVAN OWNER

IF YOU INTENDED TO TRAVEL IN EXCESS OF 70K/H OFF ROAD A GAS LEAK DETECTOR MUST BE FITTED. A GAS LEAKAGE DETECTOR IS RECOMMENDED TO BE FITTED TO ALL CARAVANS

ABNORMAL OPERATION

If you are aware that there has been a change in the operation of the appliance consult a qualified service person. This could be things such as:

- Noisy flame due to burner being lit back.
- Burner caps or parts of burner being dislodged during travels.
- Difficulty to keep the flame on the burner.
- Delay in lighting the burner.
- Yellow tipping of the burner flames.
- Sooting of cooking utensils.
- Burners not igniting properly.
- Burners failing to remain alight.
- Burners extinguished when cupboard doors are opened or closed.
- Gas valves, which are difficult to turn.

In case the appliance fails to operate correctly, contact the authorised service provider in your area.

MAINTENANCE SCHEDULE

The appliance should be kept in a clean condition and any part that appears to have been dislodged should be relocated. If it reoccurs, please notify the manufacturer as it is our intention to produce a durable appliance to suit Australian conditions. If the appliance has not been used for a long period of time light each burner, checking both high and low setting. Check the fixing screws to ensure that the cooker has not moved during your travels (Refer to the image on Page 18 for location of the

fixing screws). State safety requirements vary slightly with regard to how often gas appliances must be checked.

If you have been on a long trip over rough terrain a check by a qualified person would be advisable.

HAWK 600 SERIES CARAVAN/MOTORHOME GAS COOKERS MUST BE SERVICED REGULARLY BY A LICENCED GAS FITTER, PLUMBER OR AUTHORISED PERSONNEL.

THESE UNITS MUST BE SERVICED, AT A MINIMUM, EVERY 2-YEARS AFTER THE WARRANTY PERIOD EXPIRES REGARDLESS OF USE.

MORE FREQUENT SERVICING WILL BE REQUIRED WHEN THE CARAVAN IS TAKEN ON UNSEALED ROADS.

You should arrange service for your cooker **immediately** if you:

1. observe abnormal movement during travel, missing or dislodged components, dislodged mounting screws, visible wear and tear, noisy flames, or the smell of gas; or

2. have undertaken considerable off-road use of the Caravan/Motorhome in which the unit is fitted; or

3. purchased the appliance or the Caravan/Motorhome second hand and do not know its service history.

The above recommendations are a 'best practice' guide to help promote the safe use of Hawk 600 Series Caravan/Motorhome gas cookers.

MODELS, FEATURES AND OPTIONS

The HAWK 600 Series is available in a number of models and options. Listed below are the options:

602 Series- A built in cooker with 4 top burners or 3 plus one electric element, a grill compartment and the oven.

603 Series- A built in cooker with 4 top burners or 3 plus one electric element and a grill compartment.

604 Series- A built in cooker with 4 top burners or 3 plus one electric element.

Standard Features: Glass lid with Stainless Steel under lining for added durability. (Conforms to the Australian Standard to prevent Glass from causing injury if it is broken.), 12 Volt Ignition to all burners, Gas safety shut off to all burners so in the event that a knob is turned on accidently or the burner flame goes out then no gas will flow. Lid cut off systems for both the electric element and the gas burners so that closing the lid turns off all systems. (Oven Fan where fitted can still be run as a defrosting aid when food is placed in the oven), Grill and Oven pans supplied,

Options: Fan Convection Cooking in the oven, Fold away wok stand, Stiletto Heat reflective glass, Bezel knobs, BBQ Griddle Plate, Small Pie Dishes

OPERATING INSTRUCTIONS

The first thing you will find is that the burners will not operate with the lid down. This is to ensure that you cannot leave the burners running after the lid has been closed. You will notice that there is a small knob on the left side of the hob, this cuts off the gas while depressed. Similarly the electric element where fitted has a switch which prevents the element being accidently left running after the lid is closed.

All the burners are individually equipped with safety shut off systems that automatically turns the gas off to the burner in the event that the flame goes out. The system is activated every time that you light a burner by pushing the knob in for approximately 5 seconds after the burner has been lit.

CONTROLS

	Burner Location		HIGH Flame
	Grill Burner		LOW Flame
	Oven Burner		

LIGHTING THE BURNER (With electronic ignition)

Depress and turn the desired burner knob to the Hi position and while pushing the knob in depress the ignition switch. When the burner lights continue to push for a further 5 to 10 seconds to ensure the safety sensor is sensing the flame.

If the burner does not light within 10 seconds of using the electronic ignition, turn the Control Knob to OFF and wait 5 minutes for the gas to clear, then retry. If the burner does not light with the electronic ignition or manual lighting method, turn all Control Knobs to OFF, shut off the gas supply at the main gas tap and contact your local dealer for service.

WARNING: DO NOT continue to depress the control knob if the burner does not light. Gas will continue to flow while the knob is pressed in and could cause a dangerous situation.

When lighting the griller, always open the griller compartment door before attempting to light the burner.

When lighting the oven, always open the oven door before attempting to light the burner.

MANUAL IGNITION

All burners can be lit with a match. Always light the burner on Hi position and approach the burner with a flame while pushing the knob. WARNING - If the burner does not ignite immediately, repeat ignition after having followed each step below:

- Check there is sufficient gas in the bottle.
- Wait 5 minutes for gas to clear.
- Proceed with manual ignition.

If the appliance still does not light, shut off the gas supply at the main gas tap and contact your local dealer.

WARNING: DO NOT continue to depress the control knob if the burner does not light. Gas will continue to flow while the knob is pressed in and could cause a dangerous situation.

COOKTOP BURNERS

Always ensure that the flame is under the saucepan and adjust the flame to obtain this condition. Flame protruding around the edge of the saucepan only wastes gas and does not heat the pot efficiently. Do not allow the saucepan to protrude past the wire cooking surface. This may cause excess heat to the surrounds.

ELECTRIC ELEMENT

The electric hotplate is rated at 1000W and the control can be rotated in either direction to select the desired heat level. This type of element delivers even heat to the base of the pan and can be used to keep food hot for a period of time after the cooking has been completed. Just turn the control to the off position and use the residual heat stored in the element. Do not touch the surface of the element with a bare hand or anything that is likely to melt or burn until the element has cooled.

The element is excellent for simmering large saucepans. Remember that thickened liquids or small quantities of food may need to be stirred during the cooking process.

To maintain the surface of the element use a Hillmark product designed to preserve the finish of the element. Always use flat bottom pans or you may over heat the element which will cause the trim ring and the hob to discolor. As a safety precaution the cooker is equipped with a power cut off switch activated by the lowering the glass lid. This ensures that the element cannot be left on when the cooker has been closed down.

PAN SUPPORT Push Lock system.

The pan support (Trivet) is held in position using our unique Push Lock system. It ensures that there is a strong stable surface to rest your pans on that will not bounce free while travelling.

TO REMOVE TRIVET

To remove the trivet please hold the rubber locating feet on either side and pull the trivet up.
It is also advised to place a table cloth between the lid and trivet when travelling.

RECOMMENDED SAUCEPAN SIZES
RAPID BURNER – Min. 12cm Diameter to Max. 20cm Diameter
SEMI RAPID BURNER - Min. 10cm Diameter to Max. 20cm Diameter

GLASS LID

The glass lid is designed to give a stylish appearance as well as a usable work surface. The stainless steel backing reinforces the surface as well as protecting the toughened safety glass from excessive heat or knocks from pans etc.

GRILL BURNER

The grill is equipped with a surface combustion burner. This type of burner has been a household feature of Australian cookers which offer more radiant heat and keeps a wider heat pattern. It is recommended that you keep the food further away further away for large or thicker pieces of meat to allow a wider radiant area and to get a better penetration into the food . Grilling can be done with the grill door open or closed. A viewing window is provided for closed door grilling.

OVEN

The wide view 40 litre oven can be used for single shelf or multi shelf zoned cooking. Allow 25 to 30°C between shelves. The oven is calibrated for the temperature on the top shelf. If you use the next shelf down then add 25 to 30°C to the setting if the food is temperature dependent. The door is designed to give the maximum viewing of the oven even in cramped space and the twin glass system ensures low outside temperature. A unique feature of the oven is that the oven burner is located inside the oven without the large hole that is typical in domestic ovens. This reduces the time for the oven to reach temperature so that you can light the oven and place the food in the oven at the same time and don't need to wait for the oven to heat up. Hence the gas used to cook in this oven is reduced. A second advantage on this sealed type oven is that any fat spillage does not end up below the cooker where you cannot clean. Fast heat up time and quick temperature recovery are a feature of this oven because it is sealed in such a way that minimal excess air is drawn through the oven while cooking. The result is not only faster performance using less gas than normal gas ovens, but there is less heat discharged into the van. The oven is equipped with a thermostat which turns the heat down when the oven reaches the set temperature. The oven temperature is calibrated to the top shelf. Allow approximately 25°C drop per shelf when using lower shelves. To cook at 120°C set the knob to the lowest marked setting and place the food on the lowest shelf.

FAN FORCED OVEN (Option)

This oven is equipped with a circulating fan which when turned on allows you to cook more by the amount of heat available rather than the temperature setting. This is a difficult technical issue to explain but a very simple feature to use. The best example to explain temperature and heat is if you heat a pin and a steel bock to 80°C you could pick up the pin without any significant pain but the steel block would burn your hand. This is because they contain different amounts of heat even though they are at the same temperature. Fan convection cooking makes cooking easier and simpler to get good results. It does not remove a person`s cooking skill but is very tolerant of those who don't understand the art of cooking. It is not as important that the temperature is set to a specific temperature because the fan is pushing the heat around the food. It averages the temperature in the oven so you don't get burning at the top and under cooking at the bottom. This is why you can put most foods on any shelf and cook by time rather than temperature. The fan evens out the amount of heat in the oven so that you can cook most foods on any shelf, you can vary the temperature setting and simply take the food out when it is ready. You can put foods which require different temperature settings when cooked in a conventional oven at the same temperature and still get good results. You don't have to learn new settings and positions, just vary the time. At any time you can turn off the fan and the oven reverts back to a Conventional oven where you cook on a specific shelf and temperature. The word conventional is perhaps misleading because there are many other types of ovens. Just to give you an idea there are Dutch ovens, Cold Smoke Ovens, Hot Wall or Slow combustion ovens, Base heat ovens and infra red radiant ovens. They all require experience to get the best cooking results and you need to know where to place the food and at what temperature to set.

Heat up time

Heat up time is the time taken for an oven to settle at the set cooking temperature. For most ovens this takes approximately 20 to 30 minutes.

Cold start – Fan Convection

Cold start cooking means you can put the food in the oven as you light the oven. No preheating is required when using Fan Convection. This saves energy and keeps the kitchen cooler.

Zoned oven

Most conventional ovens are zoned ovens. If you use this oven without the fan it is a zoned oven. When you set the oven temperature it only measures the temperature on the shelf just above the centre of the oven. As you go up the temperature increases by approximately 25 degrees and when you go down the temperature decrease by approximately 35 degrees per shelf. If you want to cook on a lower shelf than centre then increase the temperature setting by 35 degrees per shelf. (This only applies when you cook with the fan off as a zoned oven)

Getting Started With Fan Convection (Option)

What you need to know

1. It is not that important what temperature you set so start by using the oven set at 200°C. You can adjust to temperatures to suit you later when you have seen how it works.
2. Choose the centre or second bottom shelf so that you can see the food being cooked
3. Cook something that takes 20 to 30 minutes.
4. If you have additional ingredients put them in the oven on another shelf and remove the food as finished

Additional points of information

If you want to save energy use cold start cooking and add approximately 10 minutes to the cooking time for most foods. This saves approximately 20 minutes of pre heating and running the oven at full gas rate. It also reduces energy emissions into the atmosphere.

The higher you position food in the oven the more you will save energy

Load the oven with food and cooking multi shelf saves double clean up after.

Use the wire grill tray insert to cook meat on. This allows the air to circulate under the meat ensuring even heating and moist roasts To save having to clean the oven when roasting uses an oven bag.

Fan Convection cooking leaves the surface of cakes and other baked goods slightly moister than in a zoned oven. If you prefer them dryer simply leave the food in the oven for a couple of minute with the door open and just the fan on.

If for any reason the power fails or you forget to turn the fan on the oven will cook as a conventional zoned oven.

UNIVERSAL SHELVES

The oven and grill rack can be used in either compartment.

FOOD STORAGE

The problem of where to store food being defrosted can be solved by placing it in the oven. Unlike other gas ovens there are no large holes for rodents or flies to enter.

PACKING THE PARTS FOR TRAVELLING We have provided a handle to lift the grill pan out of the rack when cooking but it has a further use. When you pack for travelling follow this procedure.

1. Place the grill rack complete with the pan and wire insert on the second oven shelf position.
2. Place the oven shelf in the top oven position.
3. Place the oven baking dish between the top shelf with the grill pan

4. Now lay the handle on the top of the oven shelf with the handle facing into the oven and the two legs dropping through the wire of the oven shelf.
5. Pivot the handle up so the legs hook on the front wire of the shelf and bring the handle to the vertical position.
6. Now close the oven door which will prevent the handle falling back and the shelves will be held in position for travelling.

CLEANING

The stainless steel can be cleaned using warm soapy water. If you use a scourer or steel wool always rub in the direction of the brush finish.

OVEN COOKING CHART

The following is a guide to cooking as a zoned oven. For fan convection you can start using it as a guide but as has been said previously shelf and temperature is not as critical. But remember that the art of cooking is with the Chef`s experience. You will find that these guide instructions can be varied due to pan types, amount of liquid used and freshness of some ingredients. The shelf positions are numbered from the top down. A quick method of converting old recipes from F to C is halving the recommended F setting.

RECIPE	SHELF	SETTING	TIME
Scones	1	230°C	10 – 15 Mins
Biscuits Rolled	1	180°C	10 – 15 Mins
Biscuits shortbread	2	160°C	10 – 15 Mins
Muffins	2	200°C	40 Mins
Meringues Hard	3	120°C	60 Mins
Meringues Soft	2	180°C	30 Mins
Cakes Patty	1	190 – 200°C	15 – 20 Mins
Cakes sponge	1	190°C	18 – 20 Mins.
Cakes Plain Butter	1	180°C	50 – 70 Mins.
Cakes Nut Loaf	1	180°C	45 – 50 Mins
Cakes Boiled Fruit	2	180°C	60 – 90 Mins.
Cakes Rich Fruit	2	140°C	3.5 – 4.5 Hr.
Pastry Cornish Pastie	2	220°C	20 -30 Mins.

Pastry Custard	1	200°C	25 – 30 Mins.
Pastry Steak & Kidney	2	220°C	30 – 40 Mins.
Pastry Cream Puff	1	200°C	30 – 40 MINS.
Bread Buns	2	220°C	20 – 30 Mins.
Bread Loaf	2	220°C	30 – 40 Mins.
Desserts Chocolate Pud	2	180°C	40 -50 Mins.
Desserts Cheese Souffle	2	200°C	40 – 50 Mins.
Meat Beef	2	200°C	40 – 60 Mins/ Kg
Meat Lamb	2	200°C	40 – 60 Mins/ Kg
Meat Veal	2	180°C	60 Mins / Kg
Meat Pork	1	220 – 200°C	60 Mins /Kg
Poultry Chicken	1	180°C	45 Mins / Kg
Poultry Duck	1	200°C	60 Mins / Kg
Poultry Turkey	2	180°C	40 – 45 Mins /Kg
Fish	1	180°C	20 Mins.

SERVICE

If you require service for your Cooker please ring (03) 9359 5394 or If outside of Australia contact the dealer from which you purchased the Appliance.

Any correspondence can be mailed to the Manufacturer:
HAWK 600, 49-51 Sydney Road, Coburg, Victoria Australia 3058

DO NOT MODIFY THIS APPLIANCE

WARRANTY

HAWK 600 warrants the purchaser against defects in workmanship for a period of 12 months from date of purchase. Proof of date of purchase must be presented if making a claim if requested. HAWK 600 reserves the right to replace or repair the appliance during the Warranty period.

The Warranty does not apply to any defect, injury, loss or damage caused by or as a result of misuse of the appliance. This warranty only applies in the Commonwealth of Australia. It will not apply if notified outside of the Warranty Period.

The Purchaser shall be responsible for any expenses involved in making the appliance readily accessible for servicing and transporting the appliance to the nearest HAWK 600 service agent or dealer.

Before carrying out any service/warranty repairs you must contact HAWK 600 otherwise your warranty will be voided.

INSTALLATION INSTRUCTIONS

This appliance shall be installed only by authorised persons and in accordance with the manufacturer's installation instructions, local gas fitting regulations, electrical wiring regulations, AS/NZS 5601 - Gas Installations and any other statutory regulations.

LOCATION & CLEARANCES

Choose a position free from draughts and clear of combustible materials such as window drapes. The area must be well ventilated in accordance with AS/NZS 5601. The surrounding walls closer than 140mm should be lined or made of non combustible material or protected with a suitable non combustible material (See illustration for further information). Refer to AS/NZS 5601.2 regarding the thermal protection of combustible materials. Minimum overhead clearance is 570mm.

CLEARANCES FOR FLUSHMOUNT INSTALLATION

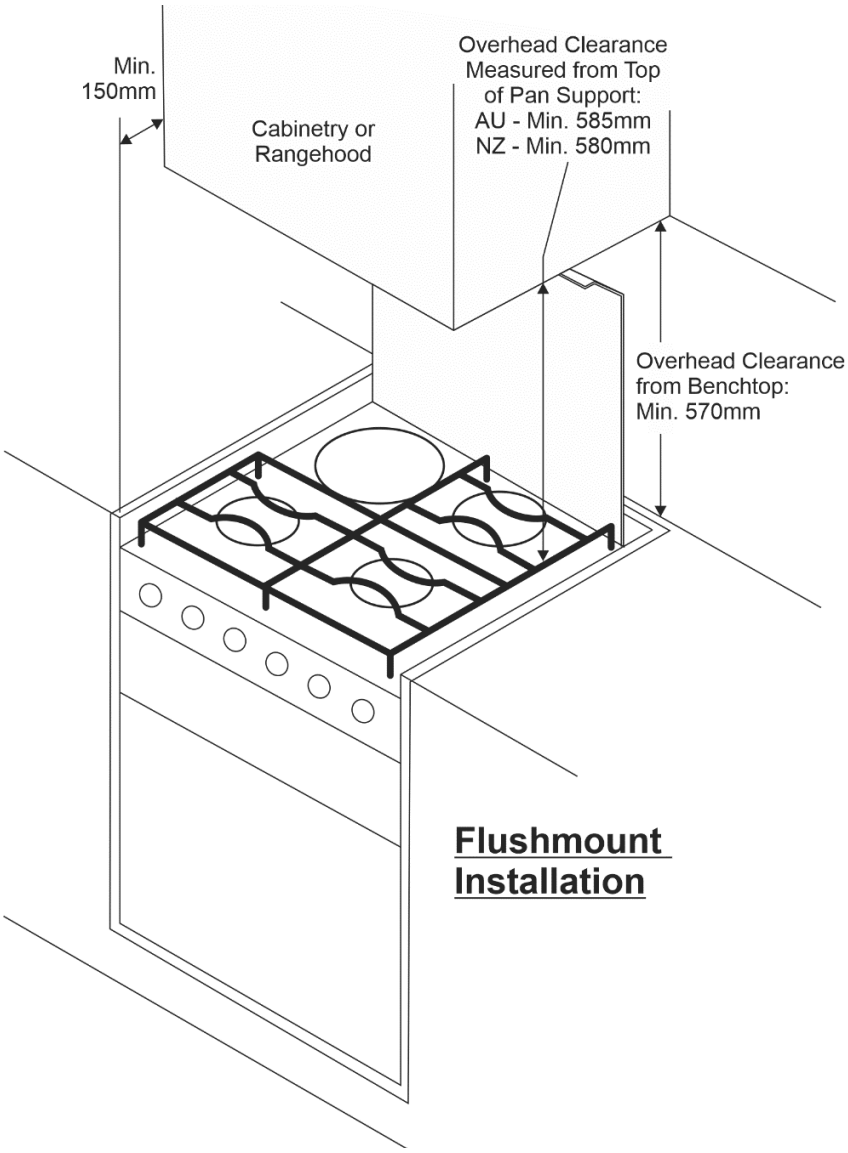

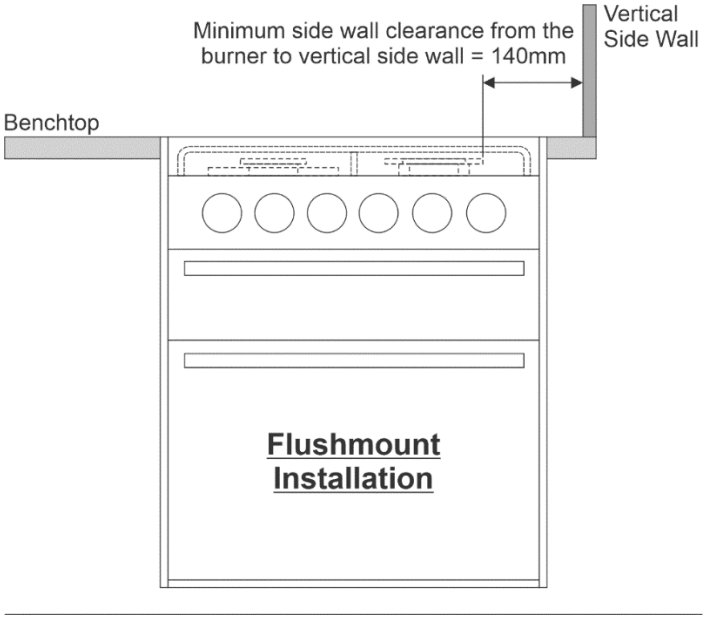

Note: Clearances required either side of the cooker.

CLEARANCES FOR RECESSED INSTALLATION

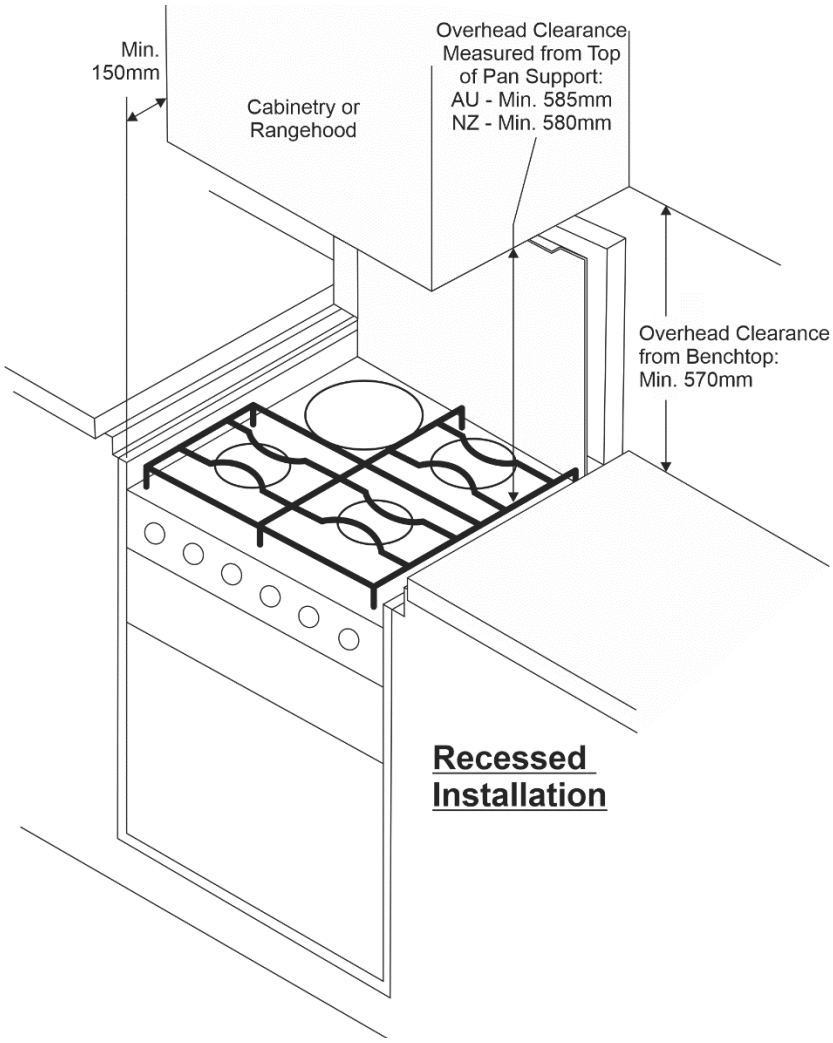

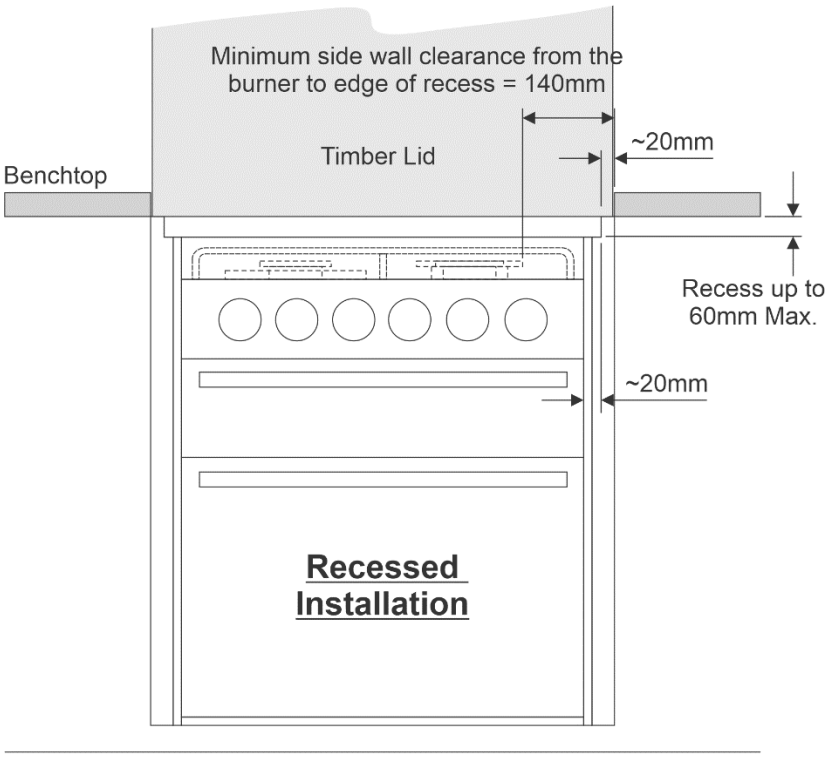

DATA LABEL

The Data Label is fixed to the return edge of the lid.

PREPARATION OF CAVITY (IMPORTANT NOTES FOR THE CABINET MAKER & INSTALLER)

The appliance has been designed to be installed into the kitchen cabinetry. Where an appliance with grill compartment is to be mounted at the end of a bench then a vertical panel is required to form the other side of the cavity. Refer to the installation diagrams to suit the type of appliance being installed for cut out sizes and special requirements if any.

It is the responsibility of the cabinet maker to ensure the cavity for the cooker is made from suitably strong materials and has a solid construction that can house and mount the cooker for longevity.

There must be sufficient support around the fixing locations to ensure the cooker will not move around or come loose during travel.

The side mounting trims should not be screwed into ends of chipboard that may chip or crack over time. Allowance should be made so that the screws in the side trims will be fastened into a strong, suitably thick and flat mounting surface.

The cooker must be fitted and supported on a solid cabinetry base to ensure that it is not hanging from the side trims. This will alleviate strain on the screw fixings.

It is up to the installer to check the dimensions of the cooker and ensure the cavity size is accurate so that the cooker rests on both the cavity base and side trims at the same time.

	Example of an appropriate cavity construction with solid base

It is the responsibility of the installer to ensure that the caravan cooker is fixed adequately into the cavity. There are several holes in both sides of the 'cooker trim' that fix the unit to the inner cabinetry. ALL of the mounting holes located in the side trims should be used to fix the cooker to the cabinetry with suitable fastening screws for the material being screwed into.

The side mounting trims should not be screwed into ends of cabinetry that may chip or crack over time.

If the cooker is being retrofitted into an existing cabinet cavity, the installer must ensure that it is of suitable construction before they proceed to fit the cooker.

CUTOUT FOR FLUSHMOUNT INSTALLATION WHERE THE COOKER IS LEVEL WITH THE BENCH TOP

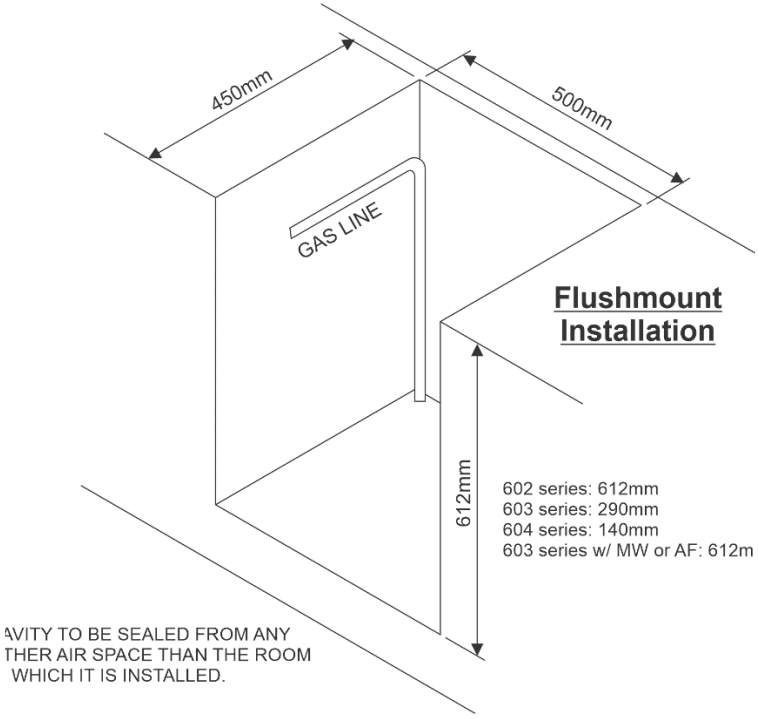

CUTOUT FOR RECESSED INSTALLATION WHERE THE COOKER IS INSTALLED WITH A BENCH COVER

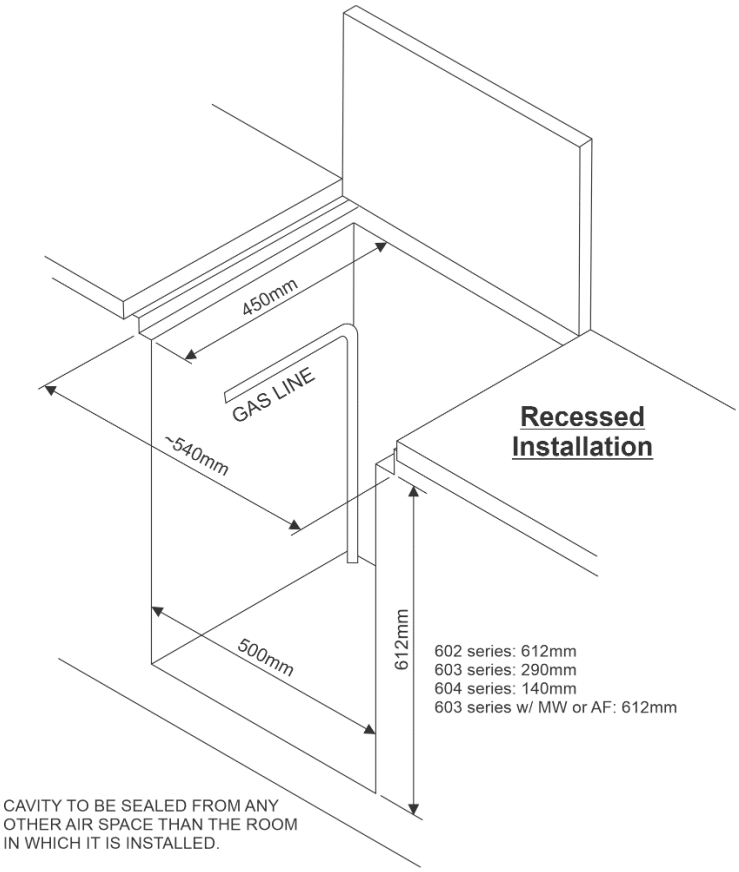

PAN SUPPORT HEIGHT FROM BENCHTOP SURFACE (FLUSHMOUNT)

(Shown where the cooker is installed flushed to the benchtop)

PAN SUPPORT HEIGHT FROM BENCHTOP SURFACE (RECESSED)

(Shown where the cooker is installed recessed in the benchtop with a bench cover)

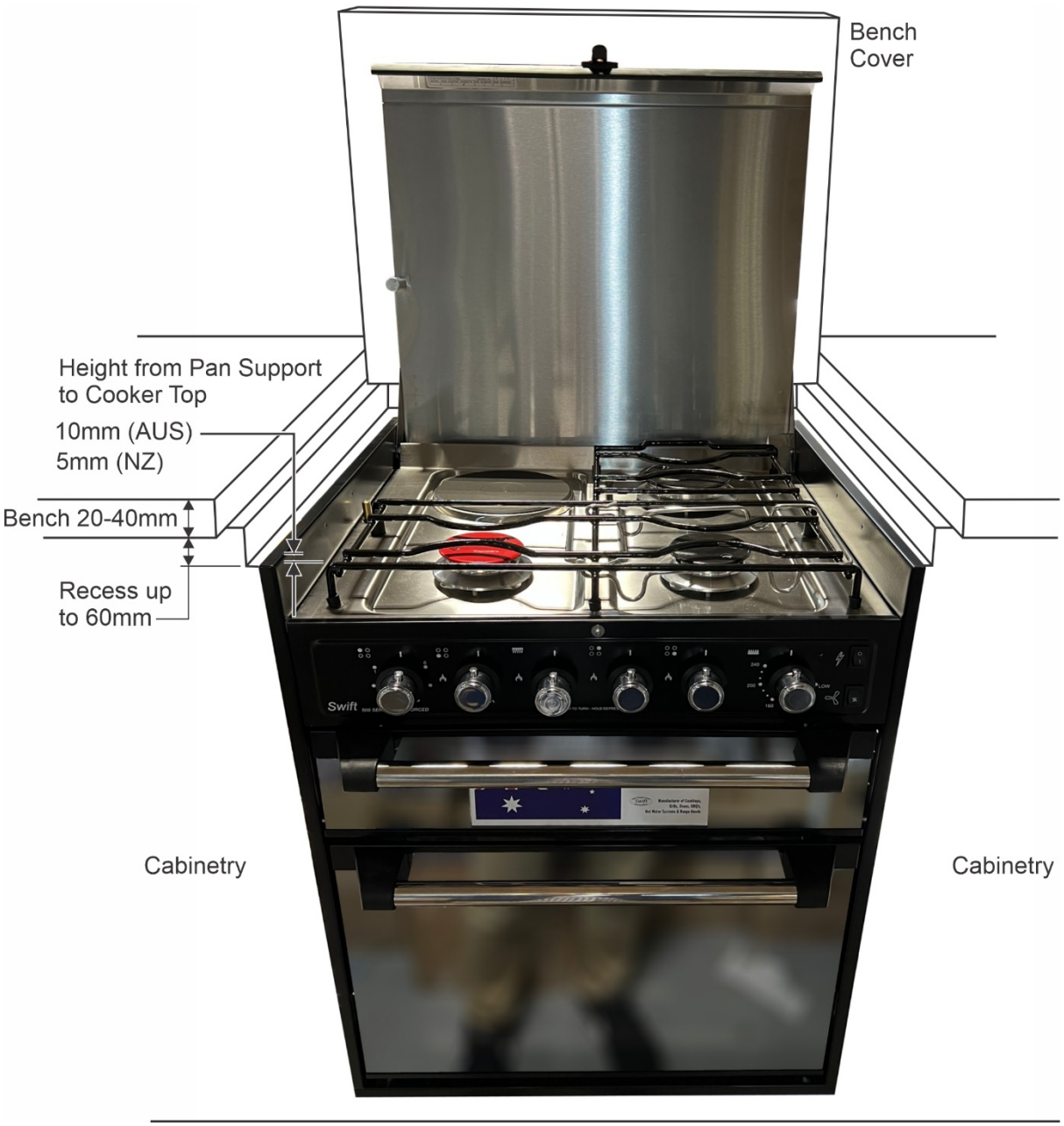

INSTALLATION WITH A TIMBER LID

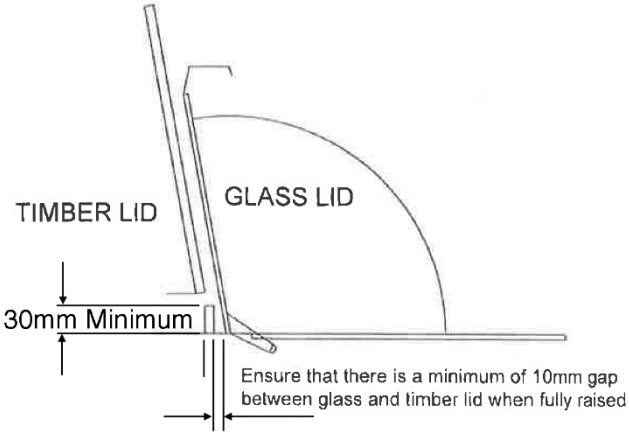

FIXING POINTS

Locate the appliance in the cavity and screw through the side trim into the cavity wall either side of lid, either side of grill door and either side of oven door. Use ALL mounting hole locations in the side trims to fix the cooker in place. Once fitted, check that the cooker is securely fastened in the cavity. The installer is responsible for ensuring correct fitment of the cooker and that it is firmly secure in the cavity at all the allotted mounting locations.

Use ALL mounting hole locations in the side trims to fix the cooker in place.

LOCATION AND PREPARATION OF GAS LINE.

Fit a class 1 isolating valve or solenoid in the space below or to the side of the cavity. Run the copper line in a loop up to the connection point (see Diagram of Cavity Cutout). Where a timber lid is to be installed over the top of the appliance an isolating solenoid may be required in the gas line if the cooker is not fitted with an interrupter valve.

Alternatively where the appliance is fitted with a gas interrupter valve below the lid then this appliance is suitable to be installed with or without a timber lid over the appliance. To identify this model lift the lid and you will see a button attached to the underside of the lid on the left hand side. The button activates the gas interrupter when the lid is closed. As a safety feature if there is a pan fire the gas can be instantly turned off by depressing the button on the left side of the hob. Holding down for 7 seconds will cause the flame sensors to close off the gas.

Cut a hole in the bottom left corner of the cavity ensuring that the pipe is within 20mm of the side wall of cavity and 100mm off the rear wall. Run 3/8 copper pipe up the rear of the cavity and bend to run horizontally to the front 130mm down from the top of bench. Cut the pipe 120mm back from the front edge of cavity and fit a 3/8 SAE flare nut. This will ensure that there is sufficient flex in the pipe to install the appliance.

BATTERY IGNITION (Where fitted)

The appliance is supplied with leads on the right hand side of the unit. When installing in a cavity ensure that the wire is drawn through the 60mm hole in the cavity wall. Connect to a 12V DC supply. (Red is Positive).

ELECTRICAL

230-240V~ 50Hz AC SUPPLY (Where fitted - Electric hotplate element and/or Fan forced oven).

All 230-240V AC cookers are supplied with a Standard Australian approved 3 pin plug and lead. If damaged, the lead must be replaced by the manufacturer or it agent or a qualified person in order to avoid a hazard. To install prepare the cavity with a 60mm diameter hole on the rear side wall near the base. A switched power point must be provided in the adjoining cupboard with clear access after installation. The element is rated at 1000Watt.

Where an electrical cord is fitted, the electrical connection is located on the right hand side of the appliance towards the rear of the unit.

FLEXIBLE HOSE

The appliance can be installed using an Australian Certified stainless steel wire mesh coated gas flexible hose of at least Class B conforming to ASNZS1869. Prepare cavity as per diagram and cut a 100mm diameter hole. The centre being 130mm down from the top edge of cavity and 200mm back from the front on the left had side of cavity wall. Attach the hose to the inlet of the appliance and

pass the free end through the 100mm hole. Connect to inlet supply at rear of cupboard. Note- Do not pass along the inside of cavity, make tight bends, or pull over sharp edges.

GAS CONNECTION

The gas connection is located at the front left hand side of the appliance with the inlet connection facing towards the rear. The inlet connection is located 8mm in from the side chassis surround and 100mm down from the top surround.

The gas connection is made using a 3/8" SAE Compression fitting on the left side of the appliance.

GAS TYPE

The appliance is intended for use with Propane Gas in Australia and NZLPG in New Zealand

COMMISIONING THE APPLIANCE

The appliance is adjusted for normal operating settings before leaving the factory. Where there is a timber lid over the appliance check for either a solenoid cut off system or a gas interrupter (popit Valve). Where fitted the lid must be raised to operate any burner. Model without solenoids and popits can run the grill and the oven with the lid down. To leak test the appliance raise the lid. Light each burner in turn and check that the burner remains alight within 5 seconds. Push and turn the knob from high to low to ensure the turn down setting is correctly adjusted. The flame should be a soft blue with no yellow tipping. When you are satisfied with the operation instruct the customer for correct operation. OPEN THE GRILL DOOR BEFORE IGNITING THE GRILL BURNER. OPEN THE OVEN DOOR BEFORE LIGHTING THE OVEN BURNER.

ADJUSTMENTS (Authorised Person Only)

Cooktop burner turn down setting - If the flame does not reduce by more than 50% of full rate it can be adjusted by removing the knob and adjusting the small screw to the left of the shaft with a blade screw driver.

Oven – It is not recommended that temperature calibration be made in the field. The procedure for checking the calibration is to place a temperature sensing device on the top shelf. Set the oven for 200°C and allow to run for 25 minutes. Turn the knob back to 180°C and the flame should reduce to the turn down level.

BEFORE LEAVING (INSTALLER TO TEST OPERATION OF THE APPLIANCE)

Check all connections for gas leaks with soap and water. **DO NOT** use a naked flame for detecting leaks. Ignite all burners both individually and concurrently to ensure correct operation of gas valves, burners and ignition. Turn gas taps to low flame position and observe stability of the flame for each burner individually and concurrently. When satisfied with the operation, please instruct the user on the correct method of operation.

In case the appliance fails to operate correctly after all checks have been carried out, refer to the authorised service provider in your area.

Technical Data

Nominal Gas Consumption

Description	Propane / NZLPG
602BSP (3xSR, 1xR, 1xG, 1xO)	39.5 MJ/h
602BFW (3xSR, 1xR, 1xG, 1xO)	39.5 MJ/h
602BPW (3xSR, 1xR, 1xG, 1xO)	39.5 MJ/h
602BHSP (2xSR, 1xR, 1xG, 1xO)	33.3 MJ/h
602BHFW (2xSR, 1xR, 1xG, 1xO)	33.3 MJ/h
603BSP, 603BSPM, 603BSPAF (3xSR, 1xR, 1xG)	33.5 MJ/h
603BHSP, 603BHSPM, 603BHSPAF (2xSR, 1xR, 1xG)	27.3 MJ/h
604BSP (3xSR, 1xR)	27.5 MJ/h
604BHSP (2xSR, 1xR)	21.3 MJ/h

Test Point Pressure

Test point pressure (Propane/NZLPG)	2.75kPa

Test Point is located at the end of the manifold on the Right Hand Side.

Burner Configuration

Propane/NZLPG

Burner	Injector (mm)	Bypass Orifice (mm)	By-pass Adjustment	Turndown Gas Consumption (MJ/h)	Nominal Gas Consumption (MJ/h)
Rapid (R)	0.85	0.42	Fully Closed	1.7	8.9
Semi Rapid (SR)	0.70	0.35	Fully Closed	1.4	6.2
Oven (O)	0.70	0.35	Fully Closed	N/A	6.0
Grill (G)	0.70	N/A	Fully Closed	N/A	6.0

	0	0	0	0	0	0	0
MODEL	602BSP	602BFW	602BPW	602BHSP	602BHFW	603BSP	603BSPM
TRADE NAME: HAWK 600			**GAS TYPE:** Propane (AU) or NZLPG (NZ)				
GAS APPROVAL: AGA 9039 G			**ELECTRICAL APPROVAL:** SGS-220884-EA				
230-240V~, 50Hz, 1000W, 4.2A - IGNITION 9-12V DC			**Total G.C:** 602BSP/BFW/BPW=39.5MJ/h, 602BHSP/BHFW=33.3MJ/h, 603BSP/BSPM=33.5MJ/h, 603BHSP/BHSPM=27.3MJ/h, 604BSP= 27.5MJ/h, 604BHSP=21.3MJ/h				
OVEN: 0.70mm (6.0MJ/h) **GRILL:** 0.70mm (6.0MJ/h)							
RAPID: 0.85mm (8.9MJ/h) **SEMI RAPID:** 0.70mm (6.2MJ/h)							
INLET PRESSURE: 2.75kPa MAN. PRESS 2.75kPa							
MODEL	603BHSP	603BHSPM	604BSP	604BHSP	DATE		
	0	0	0	0	SERIAL No		

DO NOT REMOVE

AUSTRALIA AND NEW ZEALAND
GAS SAFETY CERTIFICATION

Wiring Diagrams

Oven Model with Fan

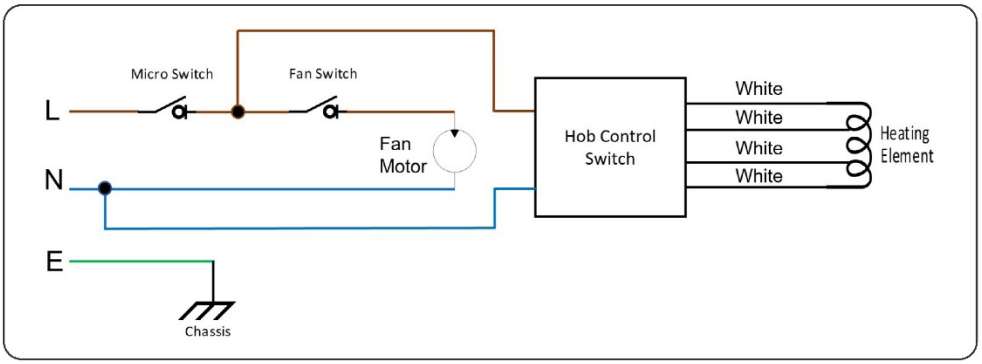

Oven Model without Fan

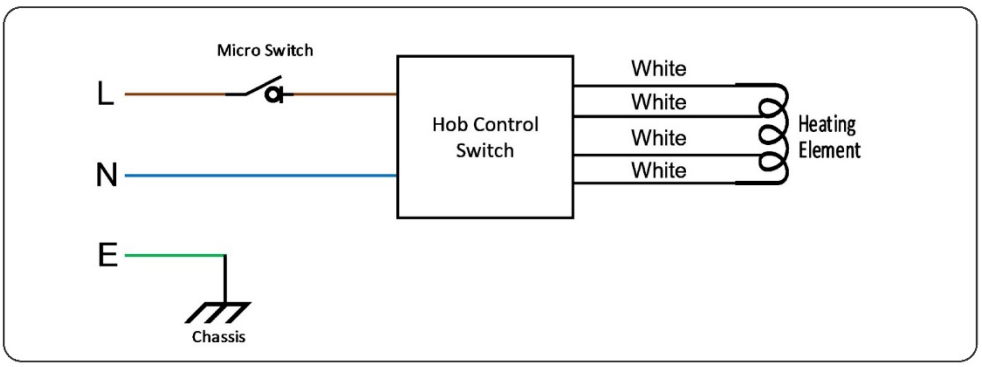

Ignition Wiring

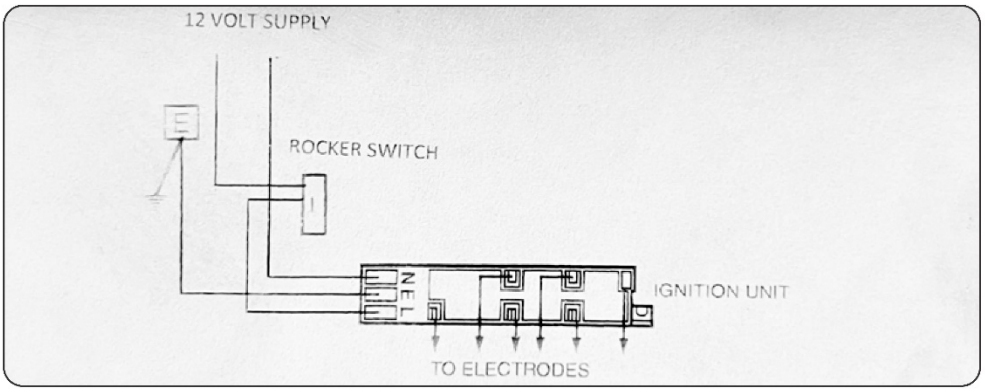

Dimension Drawings

GRILL/OVEN models

GRILL models

COUNTERTOP models

ATTENTION TO THE INSTALLER

INSTRUCTION MANUAL ADDENDUM

HAWK 600 SERIES Caravan cookers NZLPG Conversion Procedure

(For New Zealand ONLY)

WARNING: THE FOLLOWING STEPS AND COMPONENTS IN THE CONVERSION KIT ARE FOR A NEW ZEALAND INSTALLATION ONLY FOR USE WITH NZLPG. THE CHANGES SHOULD BE APPLIED BEFORE INSTALLING THE APPLIANCE AS IT WILL BE EASIER TO APPLY THE NEW LABEL PROVIDED.

Contents of kit:

- Conversion Procedure instructions
- 6x Rubber Feet for Pan Support (Grey)
- NZLPG gas type label

Step 1

Open the cooker lid and lift up the Pan Support off the cooker.

Step 2

Remove all the black rubber feet off the Pan Support rods and replace them with the grey rubber feet supplied in the bag.

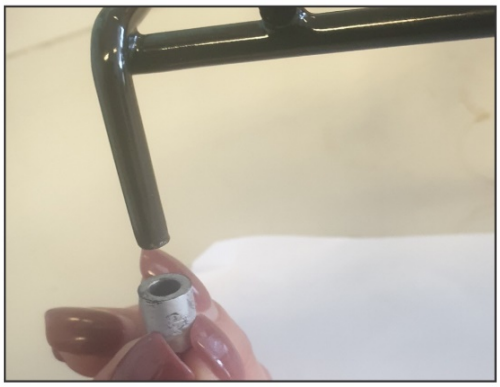

Step 3

Seat the Pan Support back down onto the cooker and push it down into place engaging the middle legs into the rubber holders in the maintop.

Step 4
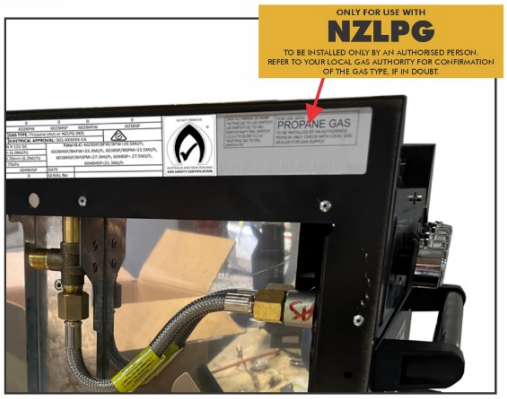
On the left side of the cooker, place the supplied NZLPG gas type label over the top of the Propane label.